310 DC Gear Motor with Magnetic Hall Encoder All-Metal Gears 7.4V 450R – Hiwonder

hiwonder.com/products/310-dc-gear-encoder-motor

- Home
- All Products
- 310 DC Gear Motor with Magnetic Hall ...

Feature

Wrapped Rear Tail Shell

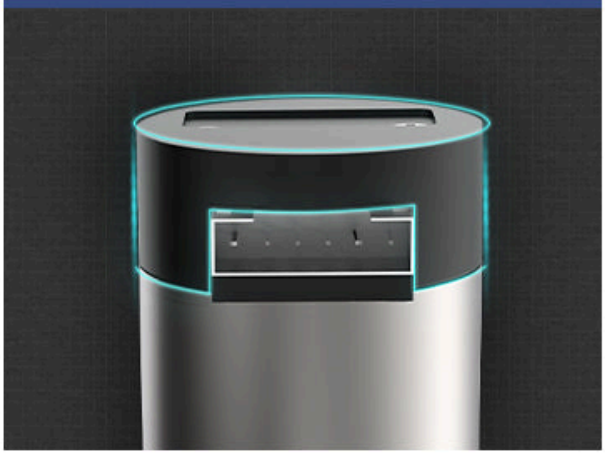

Permanent Magnet Brushed Motor

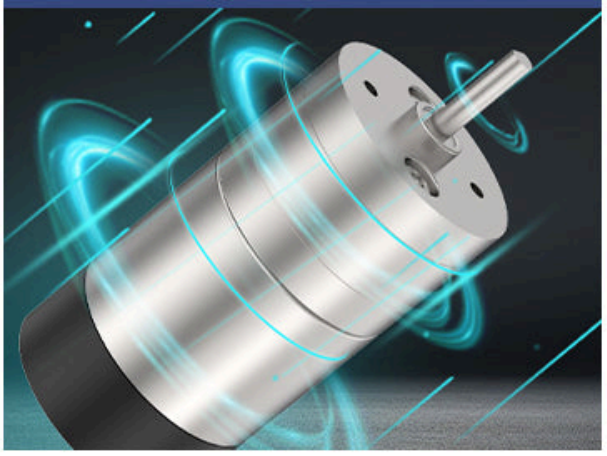

Suitable for Various Scenarios

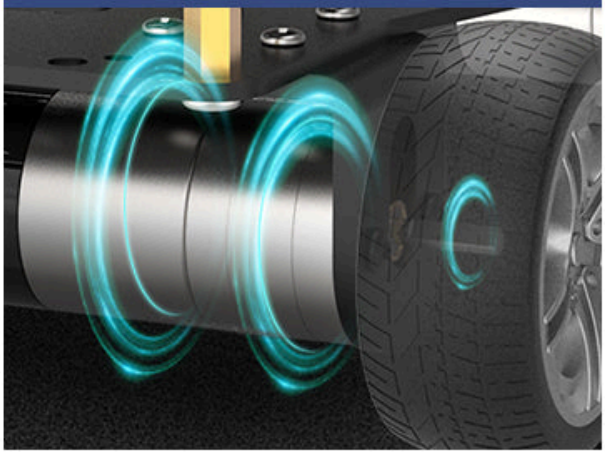

Durable Metal Gear

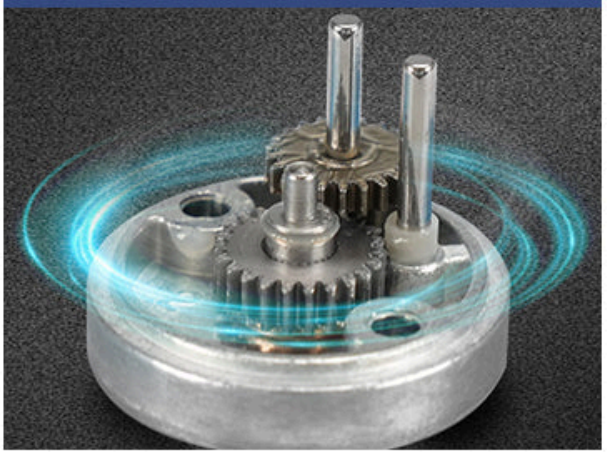

Robot Car Motor Control Diagram

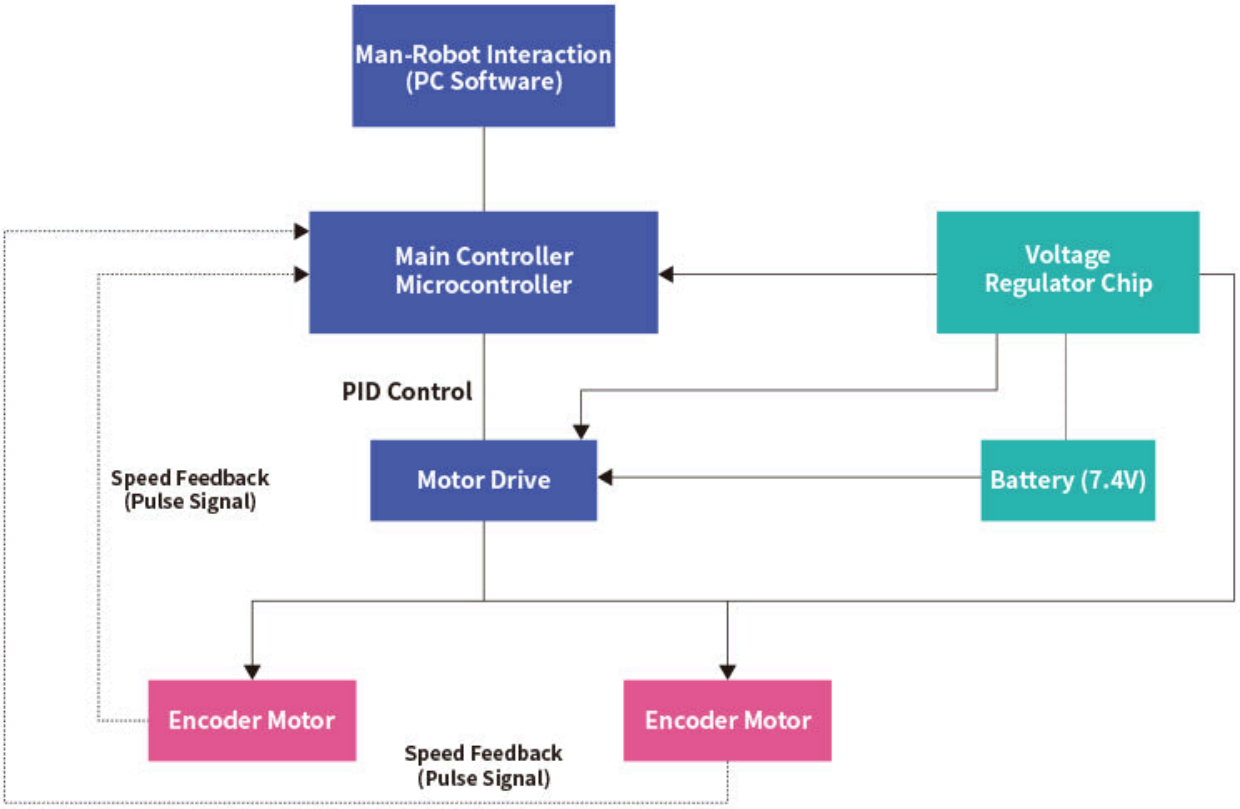

unit:mm

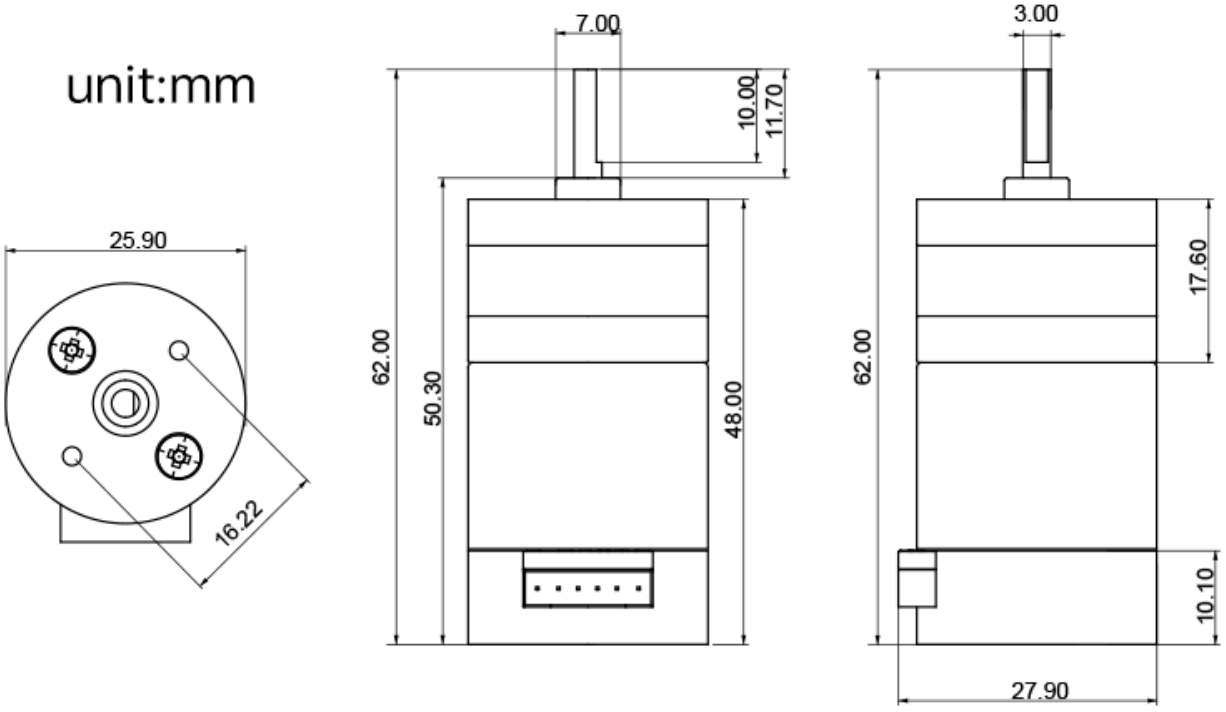
25.90
16.22
7.00
10.00
11.70
62.00
50.30
48.00
3.00
17.60
62.00
10.10
27.90

Packing List

310 encoder
gear motor

PH2.0-6PIN
dual-end cable

Packing List

310 encoder
gear motor

PH2.0-6PIN
dual-end cable

Motor mounting
bracket

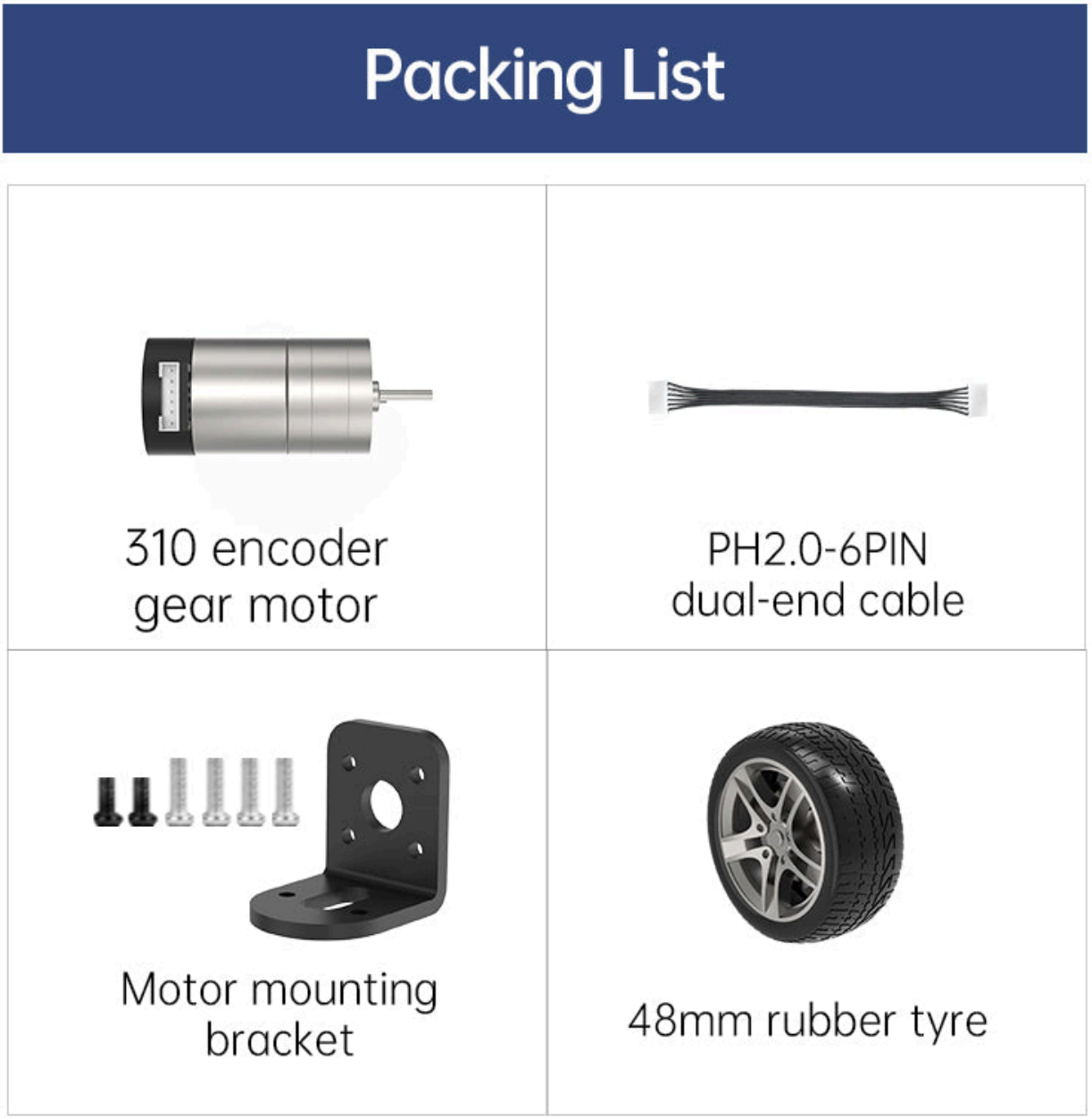

Features
Options
Fast Delivery

Technical Support

Tutorials Provided

Hiwonder

310 DC Gear Motor with Magnetic Hall Encoder All-Metal Gears 7.4V 450RPM

- The 310 DC Gear Motor is equipped with a high-precision Hall encoder and all-metal gears, reducing power consumption. Its stable speed and precise torque control greatly surpass those of stepper motors, making it an excellent choice for various DIY projects.

- Made from high-quality materials, the 310 DC Gear Motor ensures durability and stability. Its compact design, small size, and lightweight construction make it easy to install. With a 1:20 ratio, the low-speed configuration matches a 1kg.cm torque, allowing the motor to adapt to a variety of chassis materials and diverse scenarios.

Product Introduction

The Hall speed measurement code disc is a speed measurement module that utilizes Hall sensor encoders. Equipped with a strong magnetic disc, it generates AB phase output pulse signals, enabling the detection of motor rotation direction and speed. It is suitable for various intelligent vehicles with high-speed requirements, such as Mecanum wheel vehicles, balance cars, navigation positioning vehicles, etc.

Wrapped Rear Tail Shell

The motor features an wrapped rear tail shell designed to provide robust protection for the PCB circuit and magnetic ring, shielding them from external influences. This design enhances safety and extends the overall service life of the motor.

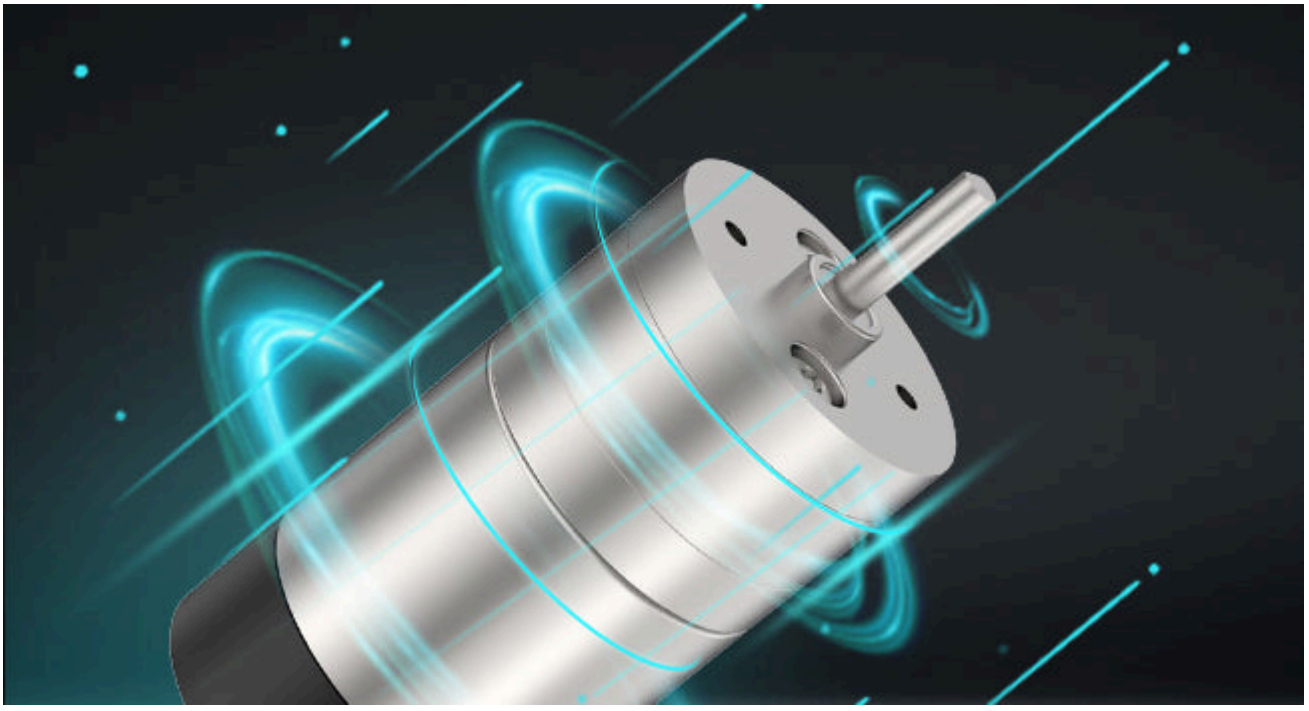

Permanent Magnet Brushed Motor

The permanent magnet DC motor offers rapid response, startup torque, and smooth shifting. These features eliminate vibrations during speed changes from 0 to the maximum, enabling it to handle larger loads during startup.

Suitable for Various Scenarios

With a 1:20 ratio, the low-speed configuration matches a 1kg.cm torque, allowing the motor to adapt to a variety of chassis materials and diverse scenarios.

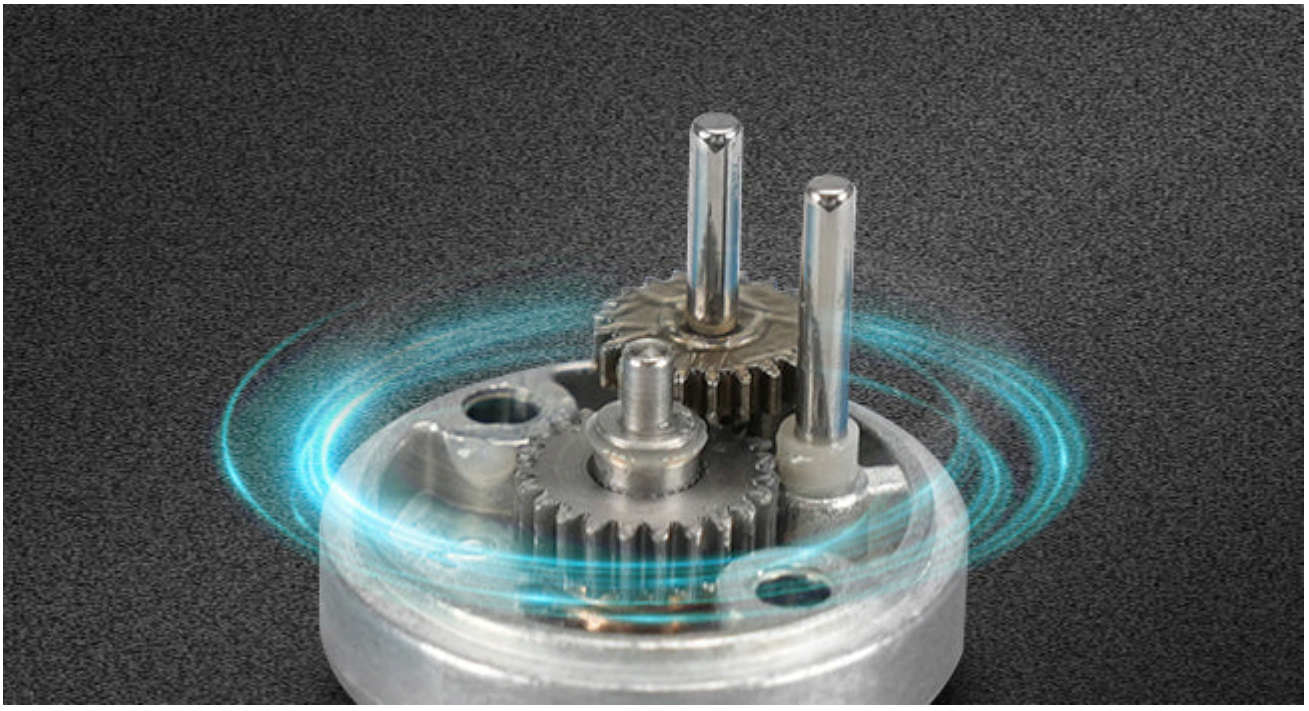

Durable Metal Gear

The motor incorporates a full metal gear and metal output shaft, reducing power consumption and extending the motor's service life.

Encoder Output Description

The 90-degree phase difference between two signals enables the determination of the motor rotation direction based on their sequence. By measuring the number of pulses per unit time and knowing the tire circumference, the current distance traveled by the tire can be calculated. Alternatively, by counting the pulses of phase AB within a unit time, the current motor speed can also be determined. In a motor with a 1:20 ratio, one rotation of the output shaft produces 13 pulses in a single phase output. With a 1:20 ratio, the maximum output when the motor output shaft completes one full revolution is (20 * 13 * 4 =) 1040 counts. This 90-degree phase difference between AB phase output pulses facilitates the detection of motor rotation direction.

Clockwise Rotation

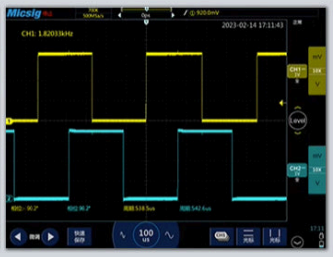

Counterclockwise Rotation

Encoder Parameter		
Model	Quantity of encoder lines	Type
Hall encoder	13ppr	Magnetic induction
Power supply range	Encoder protection	Applicable microcontroller
3.3-5V	With protection case	Applicable to all microcontroller

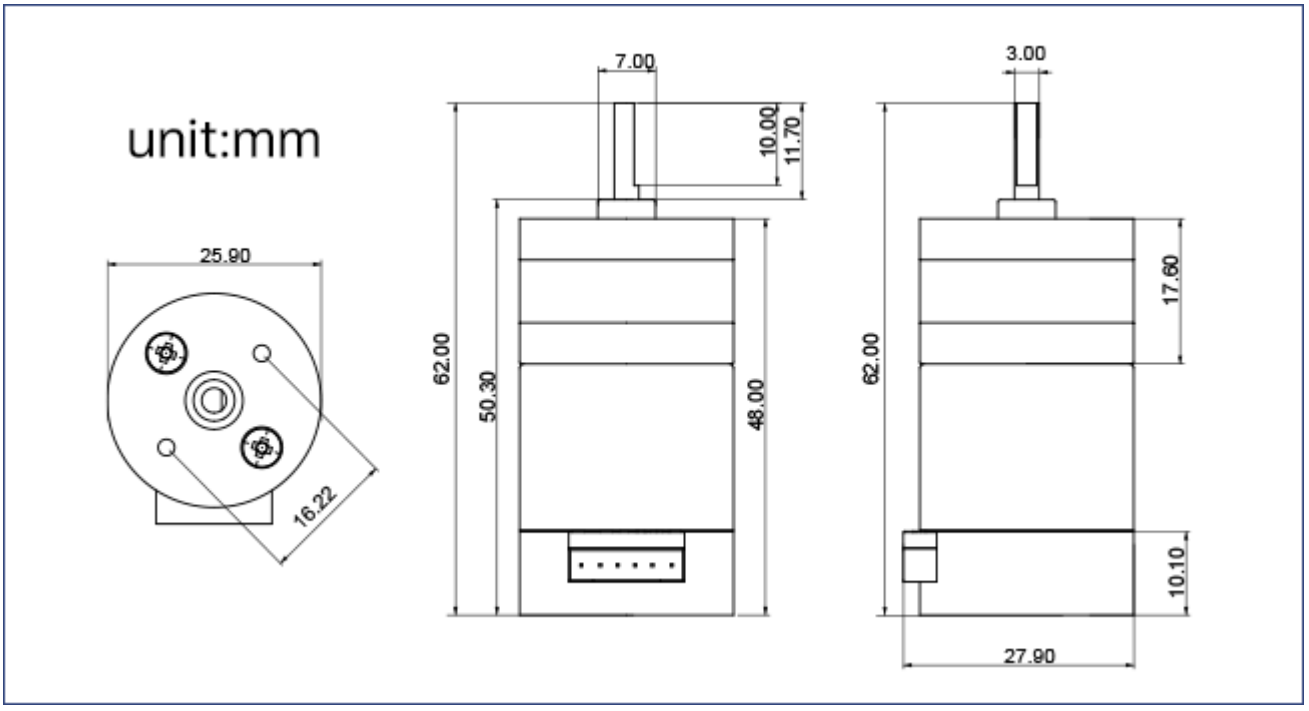
unit:mm
25.90
16.22
7.00
10.00
11.70
62.00
50.30
48.00
3.00
17.60
62.00
10.10
27.90

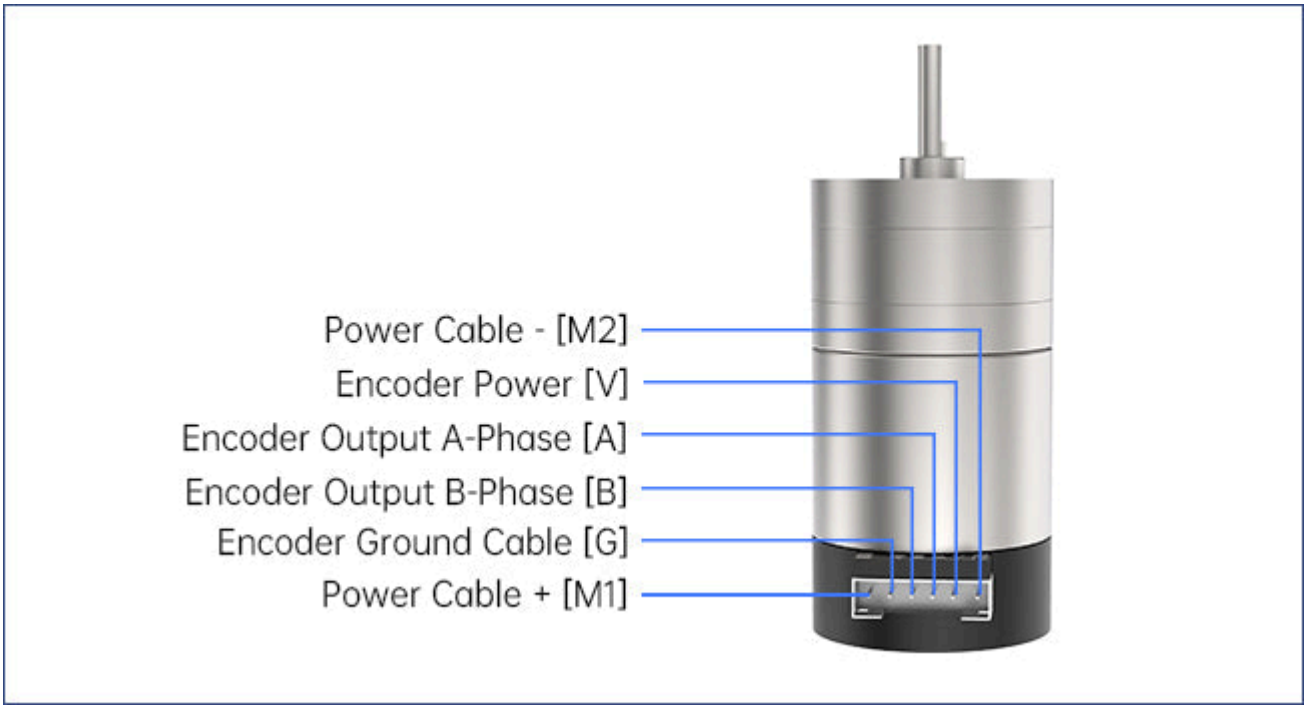
Power Cable - [M2]
Encoder Power [V]
Encoder Output A-Phase [A]
Encoder Output B-Phase [B]
Encoder Ground Cable [G]
Power Cable + [M1]

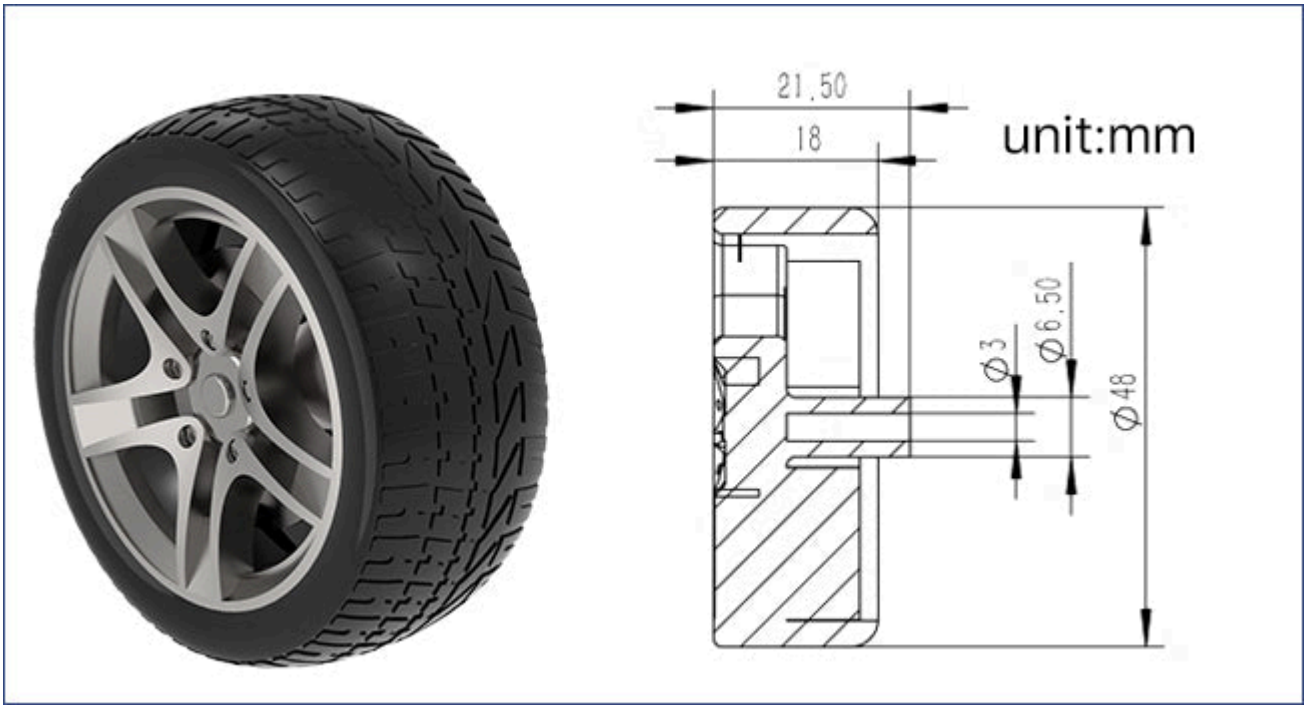

48mm Rubber Tyre

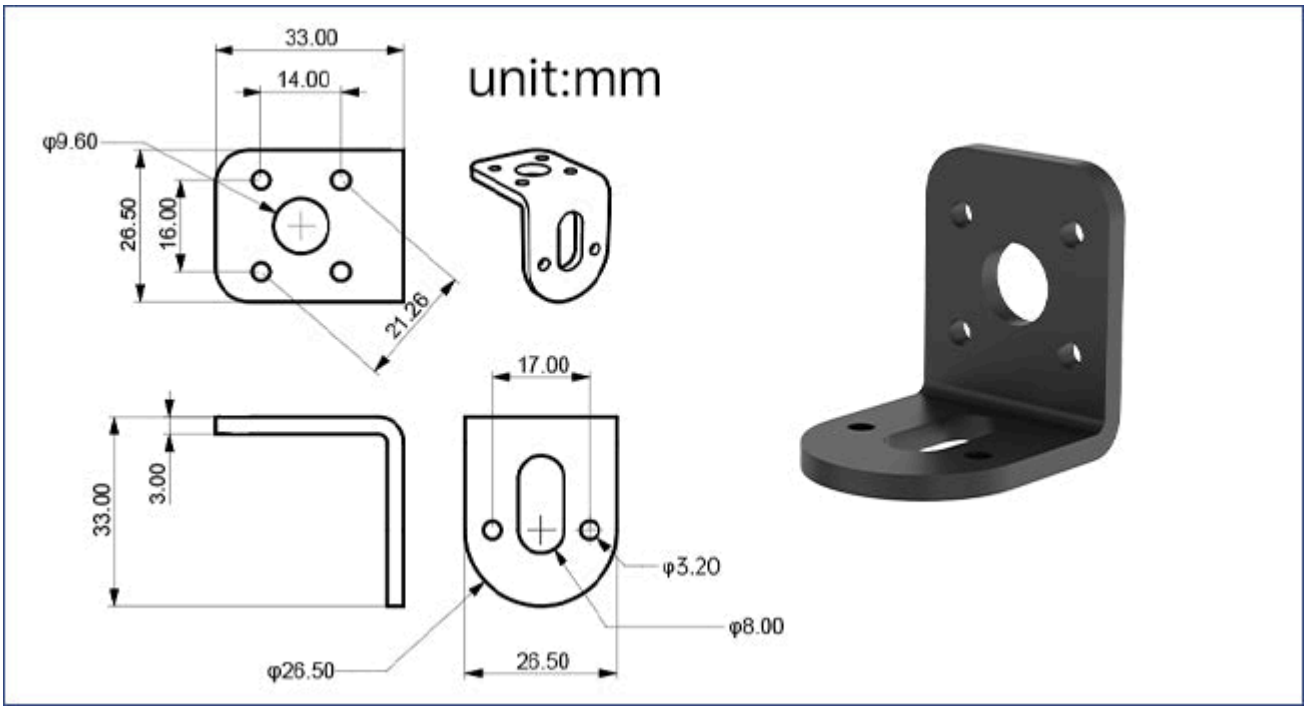

Motor Mounting Bracket

Product Parameters

Model	JGA27-310R20	Stall current	≤1.4A
Motor rated voltage	7.4V	Rated current	≤0.65A
Motor type	Permanent magnet brushed	Gear ratio	1:20

Output shaft	3mm diameter D-shaped eccentric shaft	Encoder type	AB phase incremental Hall encoder
Stall torque	≥1.0kg.cm	Encoder power supply voltage	3.3-5V
Rated torque	0.4kg*cm	Number of magnetic ring lines	13 lines
Rotation speed before reduction	9000rpm	Connector type	PH2.0 6PIN
Rotation speed after reduction	450±10rpm	Function	With built-in pull-up shaping, microcontrollers can directly interpret signal pulses
Rated power consumption	4.8W	Microcontroller weight	About 70g

Encoder Gear Motor Packing List

310 encoder gear motor	PH2.0-6PIN dual-end cable		

Encoder Gear Motor + Motor Bracket Packing List

310 encoder gear motor	PH2.0-6PIN dual-end cable	Motor mounting bracket	

Encoder Gear Motor + Motor Bracket + Tyre Packing List

310 encoder gear motor	PH2.0-6PIN dual-end cable	Motor mounting bracket	48mm rubber tyre